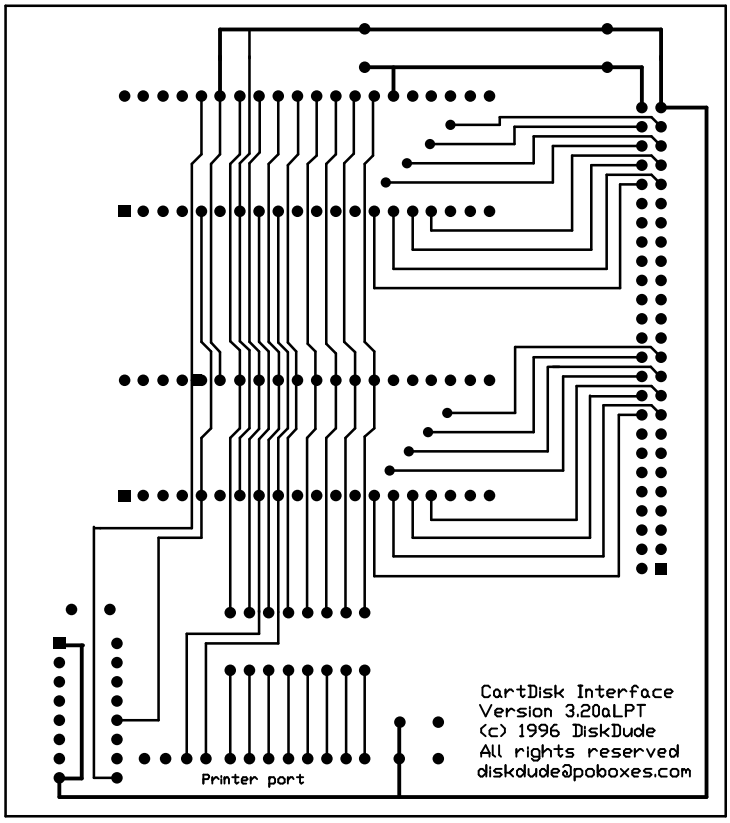
CartDisk Interface
Version 3.20aLPT
(c) 1996 DiskDude
All rights reserved
diskdude@poboxes.com
Printer port