T3 Research Network RS/960 testing

March 15, 1992
mak@merit.edu

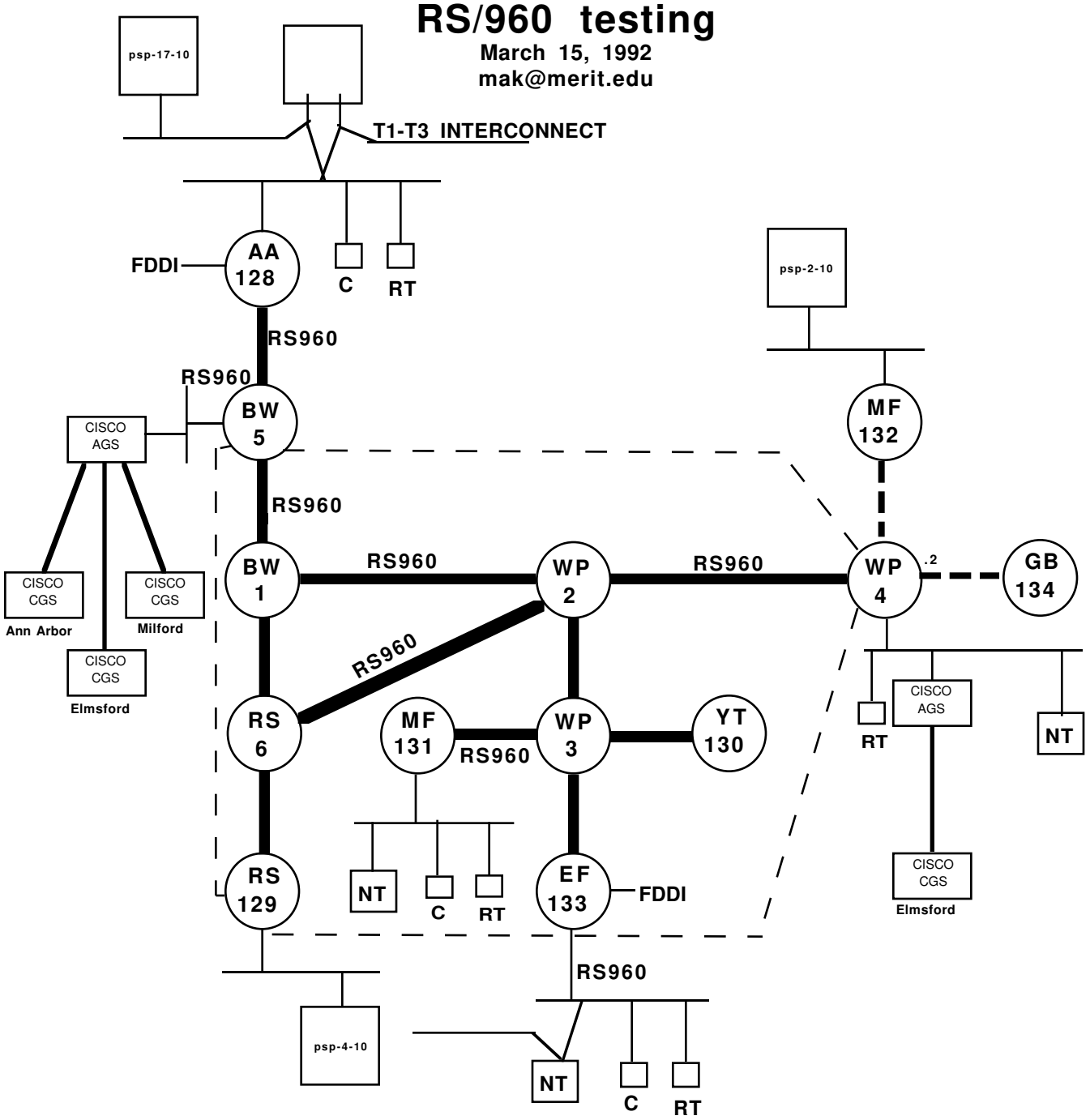

T1 Safety Net
Ethernet
56Kb
T1
T3

C = CISCO ROUTER
RT = IBM RT ROUTER

AA = Ann Arbor
BW = Bridgewater
RS = Richardson
MF = Milford
WP = White Plains
GB = Gaithersburg
EF = Elmsford